Deck valve anti-clockwise closing hot - Brushed Platinum

CL.1

20 000 741 Product version from 4/1/2023

Fits: CL.1, CYO

- hole diameter 32 mm
- handle Ø 60mm
- without rosette
- with hot marking
- WRAS

Brushed Platinum	20 000 741-06
Chrome	20 000 741-00
Dark Chrome	20 000 741-19
Brushed Durabrass (23kt Gold)	20 000 741-28
Matte Black	20 000 741-33
Brushed Champagne (22kt Gold)	20 000 741-46
Champagne (22kt Gold)	20 000 741-47
Brushed Dark Platinum	20 000 741-99

Deck valve anti-clockwise closing hot - Brushed Platinum

CL.1

20 000 741 Product version from 4/1/2023

mm [inches]

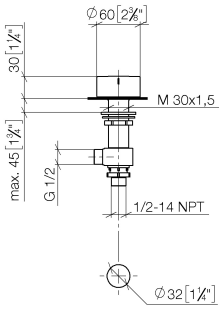

Flow rate chart

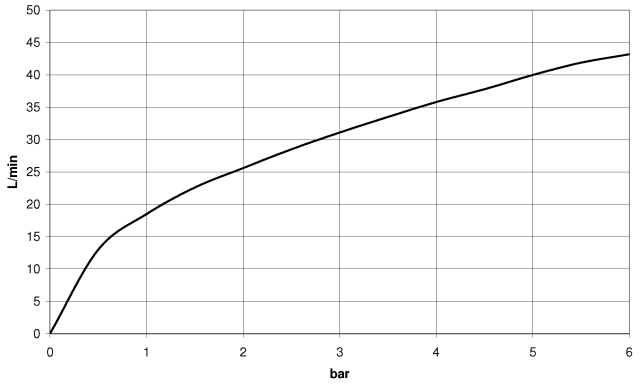

Codes & Standards

DIN 4109	ISO 3822	Scottish Water Byelaws	UK Water Supply Regulations

Ü-Zeichen

20 000 741 Product version from 4/1/2023

Certificates

WRAS_2103 LGA_28

Deck valve anti-clockwise closing hot - Brushed Platinum

CL.1

20 000 741 Product version from 4/1/2023

Parts for other finishes can be found here: Chrome

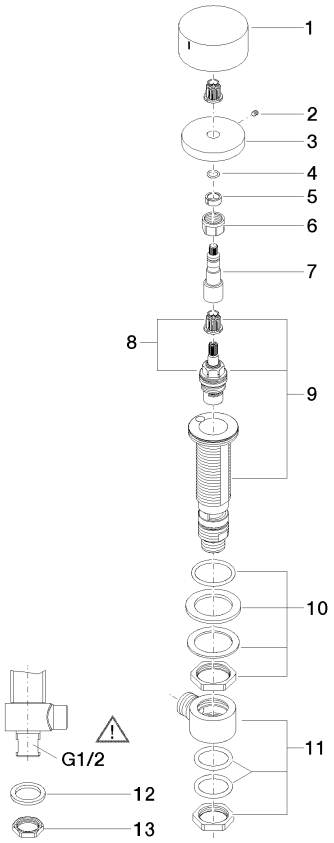

Spare parts list

No.	Item Number	Name	Quantity used	Delivery time
1	09 20 74 006-06	handle (hot)	1	10
2	90 31 11 007 00 90	pin	1	2
3	09 27 74 003-06	rosette	1	10
4	90 14 10 060 00 90	seal	1	2
5	90 14 15 020 03 90	ring	1	2
6	90 23 30 023 00 90	nut	1	2
7	09 29 06 107-00	spindle	1	10
8	90 90 03 132 00 90	top	1	2
9	04 17 11 058 32 90	side panel	1	2
10	04 23 10 032 78 90	fixing set	1	2
11	04 17 11 023 10 90	distributor	1	2
12	09 30 11 059 90	disc	1	2
13	09 23 10 012 90	nut	1	2

We reserve the right to change designs, product range and technical specifications without prior notice.
More information can be found at: www.dornbracht.com +49 (0) 2371 8899 900 mail@dornbracht.com